*Essential Readings in Light Metals: Alumina and Bauxite.*
Edited by Don Donaldson and Benny E. Raahauge.
© 2013 The Minerals, Metals & Materials Society. Published 2013 by John Wiley & Sons, Inc.


From *Light Metals 1973*, A.V. Clack, Editor

# ALUMINAS IN AIR POLLUTION CONTROL

J. F. Murphy

## Abstract

Alumina and alumina based sorbents, catalysts, and catalyst supports are used in many air pollution control applications because of high surface area, porosity and thermal stability. Although some air pollution abatement may use once-through sorbents, problems of solid waste make regeneration attractive, especially where high volume pollutants like $SO_2$ can be converted to storable sulfur. "Alkalized alumina" as a regenerable $SO_2$ sorbent has been tested extensively with some recent reports indicating possible effectiveness on $NO_x$ as well. High area alumina is used as support for catalytic materials in conversion of $SO_2$ to $H_2SO_4$, while special aluminas provide the best catalyst for the Claus process for conversion of $H_2S$ and $SO_2$ to sulfur. The wide range of available alumina properties of value in air pollution abatement in smelters, power plants and chemical processing are illustrated by discussing (a) dry sorption of $SO_2$ by alkalized alumina, (b) absorption of $SO_2$ in slurries of basic aluminum sulfate, (c) catalytic conversion of $SO_2$ to $H_2SO_4$, (d) catalytic conversion of $SO_2/H_2S$ to elemental sulfur in the Claus process.

J. F. Murphy is Manager, Chemicals Research, at Kaiser Aluminum & Chemical Corporation's Center for Technology, Pleasanton, California.

## Introduction

A number of sulfur-containing gases are properly classified as air pollutants. Sulfur dioxide, the most common pollutant, is a problem in the flue gases from combustion of sulfur-containing fuels, in the effluent from inadequate operation of Claus plants for the removal of hydrogen sulfide from sour natural gas, and in the off-gases from the smelting of sulfide ores. Many recent studies have discussed methods of control or removal of sulfur compounds from off-gases or from fuels. Unfortunately, with the low levels of pollutants required by various air pollution regulations, the short times allowed for compliance and the state of the art in effluent clean-up, the control of sulfur pollution is likely to be quite expensive.

The purpose of this paper is not to review all methods for sulfur pollution control nor to compare processes in detail nor to discuss new approaches. The purpose is rather to concentrate on one area of this problem and emphasize removal and control methods which involve various forms of alumina, discussing both advantages and deficiencies of aluminas used to date. In some effluent clean-up methods the deficiencies of alumina-based compounds are of major economic significance. Recognition of these deficiencies would seem to be a necessary first step in either removing the deficiencies or in deciding to use other methods.

## Concentration of Pollutants

### Types of Processes

While the hydrogen sulfide concentration can be relatively high in the sweetening of natural gas and the sulfur dioxide level is high in most smelting operations, a major source of sulfur dioxide pollution, the flue gas from sulfur-containing fuels, is generally quite dilute. For this reason, much emphasis has been placed on methods of concentrating sulfur dioxide from dilute streams. This involves the use of such regenerable solid sorbents as "alkalized alumina" or aqueous solutions to absorb and concentrate $SO_2$ for later reaction to sulfuric acid or elemental sulfur.

Some low-cost sorbents like lime, limestone, and dolomite have been evaluated as "throw-away" getters for $SO_2$. But while this approach may solve the air pollution problem, it creates a solid waste disposal problem. In the long run it seems likely that unless a loaded sorbent can find a useful application, it will be necessary to find economical ways to convert the sulfur to a storable or usable form and to regenerate the sorbent for reuse.

In regeneration of such solid dry absorbents, one approach oxidizes the sulfur to sulfuric acid. While this route can fit particular situations where the need for the acid approximately matches the supply, considerations of possible volume of acid produced from pollution abatement indicate that the supply will be much greater than the demand for sulfuric acid. Therefore, generally, the sulfur compounds must be converted into

an easily storable form like elemental sulfur. The Claus process, discussed in a later section, is one good way of converting $SO_2$ or $H_2S$ to elemental sulfur.

As noted above, there are some sources of sulfur compounds of sufficiently high concentration that there is no need for a concentrating step. However, there seems to be no doubt of the need for economical and pollution-controlled processes to change sulfur compounds into elemental sulfur. Because of this, the following discussion will review data on concentration by absorption, present some information on forms of alumina suitable for catalyst support, and, finally, will emphasize reactions and catalysts used for the production of elemental sulfur from relatively concentrated forms of sulfur dioxide or hydrogen sulfide.

## The Alkalized Alumina Concentration Process

"Alkalized alumina" is the name given to a sorbent based on aluminum oxide developed largely by the U. S. Bureau of Mines under contract with the National Air Pollution Control Administration. This sorbent has been evaluated in processes which exemplify the regenerative dry sorbent method of concentrating $SO_2$. The sorbent and process as applied to flue gas treatment was discussed by Bienstock, Field, and Myers in 1967 (1). In the Bureau of Mines process the hot flue gases pass through filters or precipitators to remove particulate and then into a reaction chamber where the gases contact the alkalized alumina. The sorbent reacts with $SO_2$ and $SO_3$ at about 600°F to remove the sulfur as surface sulfites and sulfates. The purified gases then pass through a cyclone or precipitator to remove remaining particulates before discharge to the stack. A flowsheet for the alkalized alumina process (1) as applied to concentrating $SO_2$ from flue gas is shown in Figure 1.

After the sorbent is fully loaded, it is conveyed to another reactor where it is regenerated by reducing gas at temperatures depending on the gas and the sorbent. The regenerated sorbent is then recirculated to the flue gas contactor, and the hydrogen sulfide resulting from the reductive removal of sulfur oxides is converted to elemental sulfur in a Claus process reaction. The properties of alkalized alumina are of critical importance to the technical and economic feasibility of the process.

The term "alkalized alumina" covers many compositions, because the ratio of sodium oxide to aluminum oxide in the product may vary over a wide range. According to Schlesinger & Illig (2), of all the preparations evaluated in work by U. S. Bureau of Mines personnel, a sorbent developed by Bienstock & Field showed the best all-around properties. This was produced by precipitating dawsonite ($NaAl[CO_3][OH]_2$) by combining solutions of aluminum sulfate and sodium carbonate in water (3). When activated, the dawsonite produces a sodium aluminate, the composition of which depends upon precipitating conditions. According to Schlesinger & Illig, the dawsonite reacts in a reducing atmosphere of about 600°C to yield a sodium aluminate with about 20% sodium (8% less than stoichiometric). Apparently the regeneration rate and the mechanical properties of the final pellet are dependent upon the sodium content of the sodium aluminate produced. Mechanical properties, especially attrition rates, are of critical importance to the cost of this process (4).

In the sorption step, sulfur dioxide reacts with the sodium aluminate to produce $Na_2SO_3 \cdot Al_2O_3$ while $SO_3$ produces $Na_2SO_4 \cdot Al_2O_3$. Regeneration of the spent sorbent uses reducing gases like hydrogen, carbon monoxide, or more economical mixtures to produce $H_2S$. Regeneration rate depends upon temperature and is generally better at the same temperature for hydrogen than for carbon monoxide. Carbon monoxide alone will reduce sulfites and sulfates to metal sulfides which can then be converted to $H_2S$ by a second-stage treatment with carbon dioxide, or carbon dioxide + steam, at temperatures as low as 300°C (2). Unfortunately, also, the carbon monoxide reaction produces carbonyl sulfide as one of the reduction products. Unless care is taken, this carbonyl sulfide can be a problem in later Claus process reactions to produce elemental sulfur.

Equations given by Town, Sanker & Kelly (4) for the formation, activation, $SO_2$ sorption and regeneration of alkalized alumina are given below.

Precipitation of "basic sodium aluminum carbonate":

$$2Na_2CO_3 + Al_2(SO_4)_3 + 4H_2O \rightarrow 2NaAl(CO_3)(OH)_2 + Na_2SO_4 + H_2SO_4$$

$$6Na_2CO_3 + 2Al_2(SO_4)_3 + 11H_2O \rightarrow Al_4(OH)_{10}CO_3 \cdot H_2O + 6Na_2SO_4 + 5H_2CO_3$$

Activation in $H_2$, $N_2$ or air at 600°C-700°C:

$$NaAl(CO_3)(OH)_2 + \text{heat} \rightarrow NaAlO_2 + CO_2\uparrow + H_2O\uparrow$$

$$Al_4(OH)_{10}CO_3 \cdot H_2O + \text{heat} \rightarrow 2Al_2O_3 + CO_2\uparrow + 6H_2O\uparrow$$

Sorption of $SO_2$:

$$2NaAlO_2 + SO_2 \xrightarrow{\text{Below } 230^\circ C} Na_2SO_3(\text{on } Al_2O_3)$$

$$2NaAlO_2 + SO_2 + \tfrac{1}{2}O_2 \xrightarrow{\text{Above } 230\ C} Na_2SO_4(\text{on } Al_2O_3)$$

Reductive regeneration by $H_2$:

$$Na_2SO_3(\text{on } Al_2O_3) + 3H_2 \rightarrow 2NaAlO_2 + H_2S\uparrow + 2H_2O\uparrow$$

$$Na_2SO_4(\text{on } Al_2O_3) + 4H_2 \rightarrow 2NaAlO_2 + H_2S\uparrow + 3H_2O\uparrow$$

Reductive regeneration by CO (2):

$$Na_2SO_4 + 4CO \xrightarrow{680^\circ C} 0.3Na_2O + 0.7Na_2S + 0.3COS + 3.7CO_2$$

$$0.7Na_2S + 0.7CO_2 \xrightarrow{300^\circ C} 0.7Na_2O + 0.7COS$$

$$Na_2SO_4 + 4CO \rightarrow Na_2O + COS + 3CO_2$$

The sorption and regeneration steps are influenced by a number of impurities. According to Newell (5) and confirmed by the U. S. Bureau of Mines work, some iron should be present in the sorbent to increase the reduction/regeneration rate. One percent iron seems to be sufficient (2).

The alkalized alumina process is certainly technically feasible, but two problems add significantly to cost. First, the high temperatures required for regeneration (relative to absorption) make for high energy costs. Further, the sorption/desorption or regeneration cycle may produce

stresses in the nodular sorbent which may be partly responsible for the relatively large attrition losses. These are variously stated to be as high as 7%, whereas to be economical, the losses would need to be held to about 0.1% (4).

Recent USBM studies have developed a stronger absorbent that can be regenerated at a lower temperature with less reducing gas. This absorbent is prepared by impregnation of copper oxide into porous oxide supports (6). A number of supports were evaluated using impregnated copper salts in levels ranging from 2.6 to 8.28%. One porous silica sphere sample and one alumina sphere sample were found to be sufficiently attrition resistant for the application though the amount of sorbed $SO_2$ was smaller than for alkalized alumina. With supports containing 4-6% copper, sorption occurs above 300°C, and reductive but not thermal regeneration is possible with $H_2$ or $CH_4$ over many sorption/regeneration cycles. A conceptual process design for a 1,000-megawatt power plant burning 3% sulfur coal and using 300°C as sorption temperature was developed. Calculations indicate that the process will increase costs by 1.62 mills/kwh before credit for by-product acid. While these costs are high, a significant reduction in costs might be possible if the power plant were modified to provide for sorption at 425°C to decrease bed costs, reheating costs and allow lower cost equipment.

The work of Schlesinger & Illig (2) indicates that the reduction temperature depends markedly upon the gas used for reduction. Thus, a high hydrogen content in reduction gases will decrease the required temperature. There is also strong evidence that catalytic materials like iron oxide are able to increase the rate of regeneration or reduction of sulfate or sulfite. Thus it seems likely that further work aimed at increasing the rate of regeneration at low temperatures stands some chance for success. The attrition resistance required depends, of course, upon the method of use.

A recent publication (7) describes the Shell flue gas desulfurization (SFGD) process as a dry process which uses a copper-on-alumina acceptor in swing reactors for acceptance of $SO_2$ and regeneration at the same temperature (~400°C). The reactor ($SO_2$ acceptor) beds are designed to prevent plugging of the surface by using a "parallel passage reactor". In this the sorbent particles are contained by gauze in a large number of flat ventilators with passages between for the flue gas. Removal efficiency is claimed to be typically 90% with regeneration using hydrogen or carbon monoxide or light paraffins. The publication discusses three years of successful operation in a refinery pilot plant during which time data were collected to show that this process converts sulfur compounds to elemental sulfur with a capital cost of ~$30/kwh and an operating cost after credit for sulfur (@ $30/ton) of about $200/ton of sulfur removed.

Such modified engineering designs as the SFGD to minimize mechanical stresses on the absorbent could alleviate some of the attrition problem. In addition, there are a number of ways of producing alkalized alumina granules or nodules; and evidence shows that the strength or attrition resistance depends upon the method of production. On these bases. further investigation of the factors determining attrition resistance could lead to an improvement of this factor of sufficient magnitude to allow the use of alkalized alumina in full-size moving bed reactors.

There are a number of patents covering alkalized alumina and related sorbents. Patents covering the preparation of alkalized alumina absorbent include U.S. 3,551,093 issued to Myers and Field and assigned to the U. S. Department of Interior. A recent patent issued to Emerson and Brian (U.S. 3,557,025, assigned to Kaiser Aluminum & Chemical Corporation) teaches the production of alkalized alumina through the production of dawsonite formed by the reaction of bicarbonates with specially prepared high area transition alumina.

Appendix A lists and abstracts a number of other patents on various forms of alumina of possible use in the removal or concentration of $SO_2$. While this list is by no means exhaustive, it illustrates the variety of ways in which alumina has been used in this application.

Wet Absorption Methods

Like the dry processes, wet absorption processes may either discard the absorbent materials or regenerate them. In general, wet absorption processes are highly favored in the present state of the art. In particular the wet lime/limestone process approach looks good, because the absorbent is cheap and the sulfate-loaded sorbent product - a form of insoluble calcium sulfate - can be discarded (8). However, longer term, concern with disposition of solid wastes makes it likely that wet processes as well as dry processes will have to be regenerative.

There are two regenerative wet processes which use organic chemicals for scrubbing, while a third wet process uses a slurry of basic aluminum sulfate. The U. S. Bureau of Mines has investigated the use of sodium citrate solutions which are first used to collect $SO_2$. Then the $SO_2$ loaded solution is reacted with $H_2S$ to precipitate sulfur and regenerate citrate (9). A proprietary process (Monsanto's NOSOX) uses an undisclosed organic compound developed for the purpose of absorbing $SO_2$, which is later stripped off with water in a boiling column prior to recycling the absorbent (10).

A slurry of "basic aluminum sulfate" (BAS) has been used as absorbent for $SO_2$ in another wet regenerative process that has been used extensively in a small plant in Finland for a number of years (11). A study on the applicability of aqueous solutions in the removal of $SO_2$ from flue gases reviewed the basic aluminum sulfate process. A flowsheet from that study (10) is shown in Figure 2, and reactions for this process are given below:

Absorption of $SO_2$:

$$Al(OH)SO_4 + SO_2 \rightarrow Al(OSO_2H)SO_4$$

$$Al(OSO_2H)SO_4 + \tfrac{1}{2}O_2 \rightarrow Al(OSO_3H)SO_4$$

Stripping of $SO_2$:

$$Al(OSO_2H)SO_2 \rightarrow Al(OH)SO_4 + SO_2\uparrow$$

Sulfate Removal Step:

$$CaCO_3 + Al(OSO_3H)SO_4 \rightarrow CaSO_4\downarrow + CO_2\uparrow + Al(OH)SO_4$$

As with other regenerative methods, the oxidation of sulfite to sulfate complicates the process. In the BAS process, sulfate is removed as an insoluble calcium sulfate through treatment with lime. If the sulfur trioxide content of the gas and the oxidation of the sulfite in the aqueous system can be minimized, then only small amounts of calcium sulfate waste product are produced. Since ground limestone is the only chemical addition to the process, material costs are low. For relatively high $SO_2$ content gases (5%), only about 1% to 1½% of the $SO_2$ absorbed is oxidized to sulfate in solution. This amount of sulfate removal, while providing some difficulties with scaling, does not add materially to the cost.

The relatively high vapor pressure of $SO_2$ above the absorbing solution leads to capital cost problems in this process. According to a recent study, the largest major equipment cost is for lead-lined steel absorption towers (10). These were sized on the basis of data from the small plant operated in Finland (11). Thus, if it were possible to shift the equilibrium in the $SO_2$-BAS reaction in favor of the products, then the size and cost of both absorption and stripping equipment could be decreased. With capital dependent costs approximating 30% of the total costs, it follows that decreases in capital costs could appreciably affect the total operating costs. Without such improvements the BAS process showed a relatively high operating cost of about $160-280/ton sulfur removed or about $8-9/ton of coal burned in a generating plant (10). These numbers were based on assumed value or credit for the liquid $SO_2$ product of the sulfur dioxide absorption. Economics will be even less favorable for large-scale production because the market for liquid $SO_2$ is relatively small.

On the basis of these considerations, we can conclude that the BAS process requires significant improvement before it is suitable for general use. However, with such chemical improvement and decreased capital costs, it could fit well with a low temperature Claus process for the conversion of the sulfur dioxide to elemental sulfur. It is also possible that such a process using BAS could be used to produce a form of aluminum sulfate which might be of real value as coagulant in sewage or wastewater treatment. A Japanese company is promoting the use of basic aluminum chloride and basic aluminum sulfate as coagulants and flocculants in wastewater treatment (12).

## Aluminas as Base for Catalysts

Although the properties of various forms of special aluminas are particularly suited to their use as a support for catalytic materials for many applications, there do not seem to be any popular applications in which the sulfur is oxidized to sulfuric acid and for which alumina is used. Two European processes (Lurgi or Sulfacid process and the Reinluft) and a Westvaco process (13) use carbon to absorb $SO_2$ and catalyze the formation of sulfuric acid. In a recently discussed process (Monsanto Cat-Ox) the $SO_2$-containing gases, after removal of particulate, are catalytically converted to $SO_3$ for production of sulfuric acid (14).

The many forms of alumina provide a wide choice of properties for catalyst support. Data in Figure 3 illustrate the variety of standard and transition phases that can be produced from aluminas. Add to those shown in Figure 3 the products containing various phases like chi and rho in combination, and the choice of materials becomes very large.

This variety of phases and other properties is of advantage in choosing aluminas for catalyst substrates - the high area base upon which catalytically active materials are supported. In desulfurizing of fuel oils, for example, alumina is the support for the $CoO(NiO)MoO_3$ catalytic materials. In some cases too the alumina support is "active" in the sense of being a co-catalyst. Thomas (15) provides background data on applications of alumina supports in many petroleum upgrading processes. Some properties available in alumina supports are listed in Table I.

## Conversion of Sulfur Compounds to Elemental Sulfur

Although processes for concentration of $SO_2$ from effluent gases from stationary sources are still not fully developed, processes for the conversion of relatively concentrated sulfur gas streams to sulfur, while still being improved, are quite well established commercially. The Claus process, for example, is applicable to high concentration of sulfur-containing gases. This process depends upon the oxidation/reduction reaction between hydrogen sulfide and sulfur dioxide. Thus, starting with an $H_2S$ source (removed, for example, from sour natural gas), some of the $H_2S$ is burned to $SO_2$, which is later reacted with the residual $H_2S$ in the presence of a catalyst to produce sulfur. Conversely, a source of $SO_2$ such as a smelter would use a reduction step to produce sulfur and $H_2S$ from $SO_2$ and then react the $H_2S$ with more $SO_2$ to produce more sulfur. Of course, for concentrated sources of $SO_2$, it is possible to use reducing agents (usually carbonaceous) to reduce most of the sulfur to the elemental form. But generally such reduction processes are not sufficiently complete for pollution control purposes and require further clean-up, often by means of a form of the Claus process.

### Reduction of Sulfur Dioxide

A number of processes have been developed especially applicable to the high $SO_2$ content smelter gases to reduce $SO_2$ to elemental sulfur. Haas et al (16) demonstrated the general feasibility of removing $SO_2$ from waste gas by reduction with carbon monoxide over an alumina/iron catalyst. This work showed that oxygen must be removed (to below 0.5%) for the process to be feasible. The loss of reducing agent by reaction with excess $O_2$ is the major problem in this general approach to removal of $SO_2$. According to Semrau (17), the Boliden process used commercially in Sweden for a time employs producer gas to reduce $SO_2$. In this application, however, the consumption of the coke used as reductant was high because of the relatively high level of oxygen in the gases. A major installation in which $SO_2$ is reduced by coke was operated at the Cominco smelter at Trail, British Columbia, in which a controlled addition of oxygen was made to the reducing agent/sulfur dioxide mixture to maintain reaction temperatures above that produced by the $SO_2$ reduction reaction alone (18).

TABLE I. SOME IMPORTANT SURFACE PROPERTY RANGES FOR ALUMINA

| Item | Alumina Type No. 1 | 2 | 3 | 4 | 5 | 6 | 7 |
|---|---|---|---|---|---|---|---|
| $Na_2O$, % | 0.30 | 0.40 | 0.40 | 0.44 | 0.66 | <.02 | <.02 |
| Loss on Ignition, 1000 C, % | 6.0 | 2.5 | 6.5 | 5.5 | 1.14 | 25 | 5-10 |
| pH, Aqueous Solution | 9.0 | 10.5 | 10.5 | 10.5 | 10.35 | 6-8 | 7-8 |
| Surface, BET, N, $m^2/g$ | 380 | 288 | 329 | 262 | 78.2 | 330 | 300 |
| True Density, g/cc | 3.185 | 3.327 | 2.809 | 3.130 | 3.59 | 2.62 | 3.15 |
| Particle Density, g/cc | 1.308 | 1.114 | 1.093 | 1.829 | 2.56 | 0.28 | 0.79 |
| Porosity, % | 58.9 | 66.5 | 61.1 | 41.6 | 28.7 | 89 | 75 |
| Pore Volume, cc/g | 0.451 | 0.597 | 0.559 | 0.227 | 0.112 | 1.8 | 0.80 |
| Pore Diameter, mean, Å | 47 | 82.9 | 68.0 | 34.7 | 57 | 100 | 115 |
| Static Sorption, 60% RH, % | 21.5 | 15.5 | 20 | 16 | 5.57 | 5 | 16.4 |
| Pores, >120 Å, cc/g | 0.140 | 0.245 | 0.230 | | 0.1 | 1.3 | 0.35 |
| Pores, <120 Å, cc/g | 0.311 | 0.352 | 0.329 | | - | 0.5 | 0.45 |
| Particles, range | ½x8 | ½x8 | ½x8 | 100x325 | 100x325 | <200 | 5x8 |
| On 100 mesh, % | 100 | 100 | 100 | 2-4 | 2-4 | 0 | 100 |
| On 200 mesh, % | 100 | 100 | 100 | 40-65 | 40-65 | 5-10 | 100 |
| On 325 mesh, % | 100 | 100 | 100 | 85-95 | 85-95 | 40-60 | 100 |

In the Asarco Brimstone process, sufficient natural gas is added to react with the residual oxygen in the feed gas and to also convert the sulfur dioxide into elemental sulfur (19). A similar process uses catalytic reactions rather than a reaction furnace to increase the rate of the $SO_2$/natural gas reaction at lower temperatures (20). According to Semrau (17), a commercial reduction plant was scheduled to go into operation in late 1969 at Sudbury, Ontario (21).

It has also been suggested (8) that where $SO_2$ is collected or concentrated in a sulfite form, part of the sulfite might be heated to evolve $SO_2$ while the rest is reduced to $H_2S$ to provide the ratio of reactants required for the Claus process.

Unfortunately for pollution problems, all of these processes in which carbon or carbon compounds are used as reductants produce significant quantities of carbonyl sulfide, hydrogen sulfide and small amounts of carbon disulfide. The Asarco process passes the cooled furnace gases through catalytic reactors to remove $H_2S$ and COS. While the hydrogen sulfide is relatively easy to react with sulfur dioxide in a Claus reaction, both carbonyl sulfide and carbon disulfide are more difficult. Incineration to $SO_2$, a formerly used procedure, is no longer acceptable if stack gas $SO_2$ levels become high. Removal of $H_2S$, COS, and $CS_2$ from a gas stream by using the Claus process reaction in which sulfur dioxide oxidizes the sulfide sulfur is especially suited to smelter locations where $SO_2$ is readily available. Proper operation of Claus plants with adequate catalyst will generally yield a level of residual sulfur-containing materials going from the last converter to the tailgas incinerator sufficiently low to meet air pollution standards. Thus, in general it seems that even for cases where most of the $SO_2$ can be economically reduced by a reducing agent, the Claus reactions and equilibria are likely to be needed for the final clean-up in the pollution control section of the plant.

## Alumina Catalysts for the Claus Process

The rate of the uncatalyzed reaction between $H_2S$ and $SO_2$ is slow except at elevated temperatures. Because the equilibrium shifts in favor of the reactants as the temperature rises (see Figure 4), it is necessary to use a catalyst in the reaction. Many early catalysts were simply bauxite or other easily available, impure alumina containing materials. However more recently it has become evident that the high surface area and controlled properties of purified active spherical alumina provide improved operation in Claus plants. Many Claus plants contain from one to four catalytic converters following a step which produces $SO_2$ from $H_2S$ or $H_2S$ from $SO_2$. A flowsheet is shown in Figure 5 for a Claus plant associated with a natural gas plant in which $H_2S$ is removed from the raw gas.

Claus catalysts are subject to deactivation by the deposition of sulfur and carbon. These deposits are removed by controlled temperature regeneration. Recent work (22) demonstrates that sulfation of the catalyst surface contributes materially to losses in catalytic activity. This loss, caused by sulfation, is most evident as a loss in activity for the reactions of either carbonyl sulfide or carbon disulfide with $SO_2$. It is not the loss of sulfur but rather the pollution that is important. If enough

compounds like COS and $CS_2$ pass through the converter train and get to the tailgas incinerator, they can increase $SO_2$ concentration in the stack gas to a high enough level to close or curtail operations of the plant. Therefore, as Pearson (22) has noted, it is important to maximize the conversion and removal of COS and $CS_2$ as well as $H_2S$.

The effect of sulfate on the reaction of COS with $SO_2$ on a series of samples obtained from operating Claus plants as well as from laboratory sulfations is shown in Figure 6. Since active alumina begins with a higher surface area and is less liable to sulfating, the results are generally much better with active alumina catalysts as shown in Figures 7 and 8. More recent developments (22) indicate that improved catalysts based on active alumina will decrease even further the harmful effect of sulfate on catalysis of the $COS/SO_2$ and $CS_2/SO_2$ reactions. These newer improved catalysts whose performance is shown relative to active alumina and bauxite in Figure 9 are designed to be active in the conversion of COS and $CS_2$ even when the catalyst is sulfated during use.

Equations for the reactions occurring in Claus process plants are given below:

Generation of Reactants:

From $H_2S$ source: $H_2S + 3/2O_2 \rightarrow SO_2 + H_2O$

From $SO_2$ source: $SO_2 + 3H_2 \rightarrow H_2S + 2H_2O$

Side reactions: $CO_2 + H_2S \rightarrow COS + H_2O$

$2CO + S_2 \rightarrow CS_2 + CO_2$

Main Claus Reaction:

$$2H_2S + SO_2 \rightarrow 3/nS_n + 2H_2O$$

Other Claus Reactions:

$$\left.\begin{array}{r} 2COS + SO_2 \rightarrow 2CO_2 + 3S \\ CS_2 + SO_2 \rightarrow CO_2 + 3S \end{array}\right\} \text{Relatively slow in absence of } H_2O.$$

$$\left.\begin{array}{r} 2COS + 2H_2O \rightarrow 2H_2S + 2CO_2 \\ \text{followed by } 2H_2S + SO_2 \rightarrow 3/nS_n + 2H_2O \end{array}\right\} \text{Both reactions rapid.}$$

Net reaction $2COS + SO_2 \rightarrow 3/nS_n + 2CO_2$ Rapid by this mechanism.

---

$$\left.\begin{array}{r} CS_2 + 2H_2O \rightarrow 2H_2S + CO_2 \\ \text{followed by } 2H_2S + SO_2 \rightarrow 3/nS_n + 2H_2O \end{array}\right\} \text{Both reactions rapid.}$$

Net reaction $CS_2 + SO_2 \rightarrow 3/nS_n + CO_2$ Rapid by this mechanism.

While the main Claus reaction between $H_2S$ and $SO_2$ must be rapid and complete, it is also necessary that the reactions of COS and $CS_2$ be rapid if pollution from these compounds is to be avoided. Fortunately, there are now improved catalysts much more active at sufficiently low temperatures even in the sulfated state to provide high reaction rate for $CS_2$ and COS by the hydrolysis mechanisms shown above (19).

Lower Pollution with Low-Temperature Claus Processes

The normal Claus processes use temperatures high enough (225-300°C) to avoid condensation of significant quantities of sulfur in the pores of the catalyst. However, there is also a low-temperature Claus process version in which the temperatures are maintained below the dew point of sulfur (e.g., 100-120°C) so that sulfur deposits in the pores of the catalyst. This process takes advantage of the more favorable thermodynamic equilibrium of the $H_2S/SO_2$ reaction at the low reaction temperatures (see Figure 4). The lower temperatures may also permit the use of streams containing residual oxygen which at high temperatures would preferentially oxidize the $H_2S$ and leave unreacted $SO_2$. As the pores of the catalyst fill with sulfur, the catalytic efficiency decreases until at a certain point it must be regenerated. A flowsheet for this process given by Yodis (23) is shown in Figure 10.

Removal of sulfur from the catalyst can, in principle, be accomplished by heating alone, but many processes use a reducing gas like $H_2$ or CO with a high temperature (over about 300°C) to increase the rate of sulfur removal by forming $H_2S$(COS). For cases in which $SO_2$ is the main sulfur compound entering the process, this provides a convenient way to produce the $H_2S$(COS) which reacts with $SO_2$ in the low-temperature Claus reaction. Where CO or mixtures containing CO are used, COS is produced. When COS is present, it is important - as it is in the normal Claus process - to provide a sufficiently active catalyst to ensure destruction of the COS($CS_2$) which would otherwise remain unconverted and become a pollution problem.

If a moving bed catalytic reactor is used, part of the sulfur-filled catalyst can be continuously separated, regenerated and replaced. Alternatively, two switch reactors may be used in a way to permit one catalyst bed to be regenerated while the other is being used for the $H_2S/SO_2$ reaction.

A patented variation of the low-temperature Claus process teaches the values of CO as a rapid reductant/regenerant of spent catalyst at temperatures from 300 to 450°C. Even though the COS produced in this reduction must be hydrolyzed before the sulfur is rapidly reactive with $SO_2$, the patent claims improved results with CO reductant (24). Active aluminas with and without other catalytic additives are used throughout these low-temperature Claus processes.

It seems very likely that the use of improved catalysts together with the advantages provided by a favorable equilibria at lower temperatures will make the low-temperature Claus process of real value in final clean-up of sulfur compounds in tailgases.

ACKNOWLEDGEMENT

I am pleased to acknowledge the work of others who have contributed materially to the data and conclusions contained in this paper:

D. R. Augood for collection and review of concentrating methods.

M. J. Pearson and O. C. Olsen for data and discussion on Claus process catalysts.

R. B. Emerson for data on physical properties and thermal modification of alumina.

A. E. Barlay for patent collection and abstracting.

Margo Hicks for comprehensive literature searching.

Martha Maki for patient and superior typing and assembly.

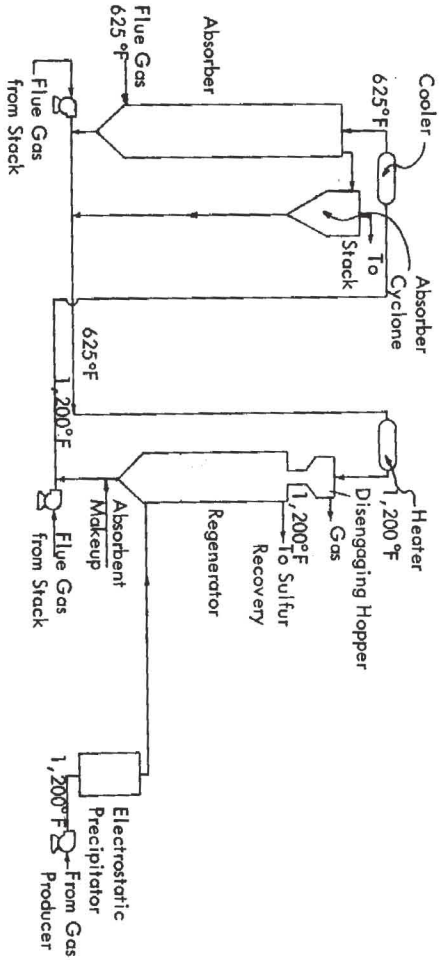


Fig. 1. Alkalized alumina process flowsheet (flue gas from 800 mw plant). Amounts of solids flow are total for six units (from Ref. 3).

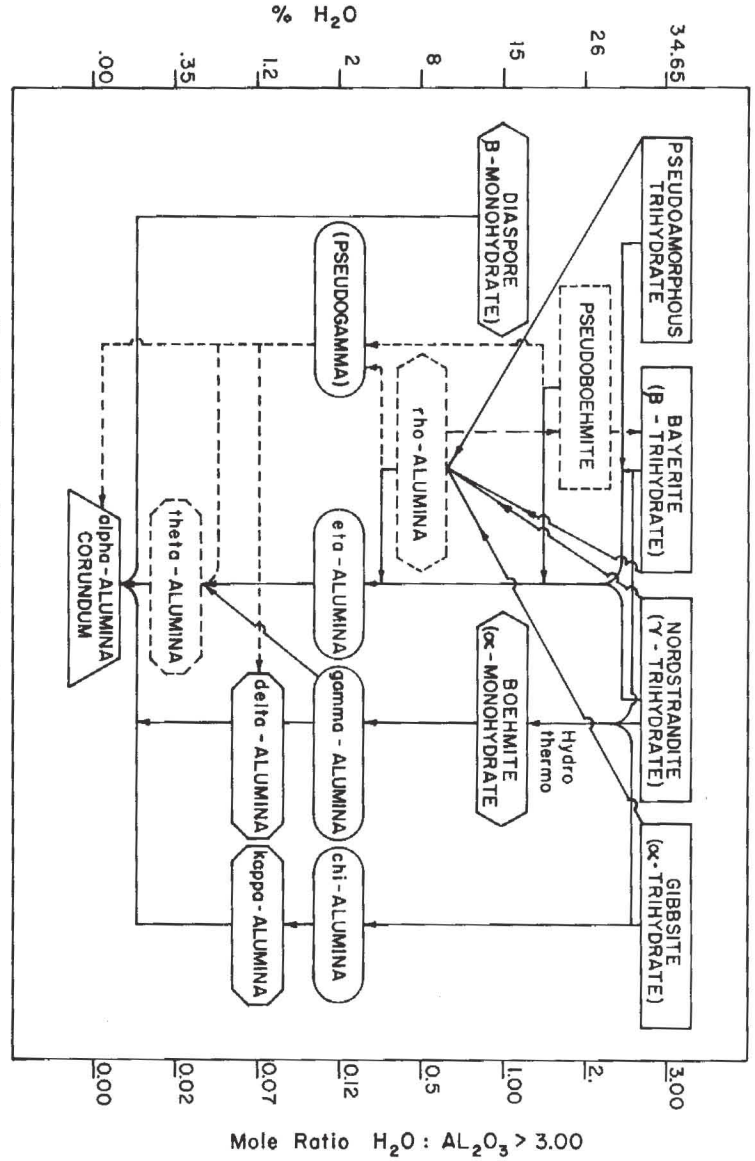


Fig. 3. Thermal Modification of Aluminas

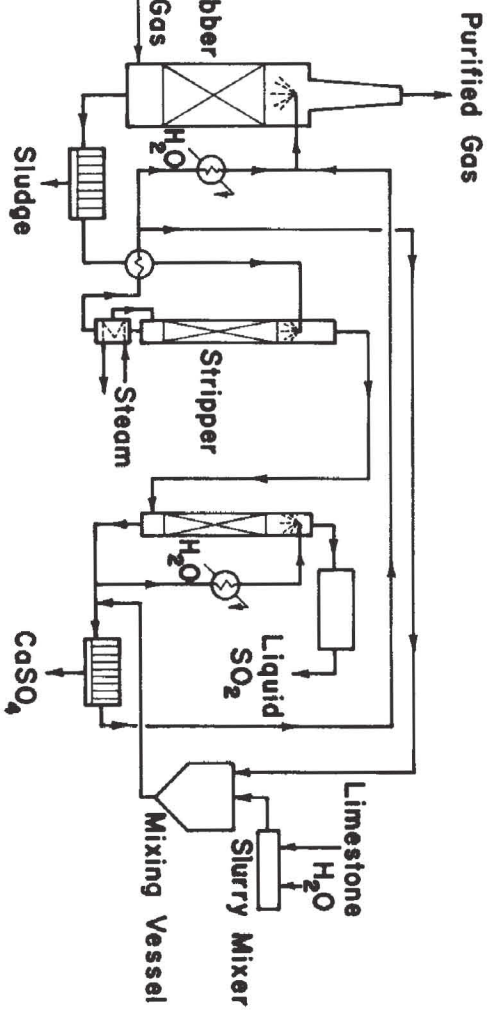


Fig. 2. Basic Aluminum Sulfate Process: Flow Diagram (from Ref. 10)

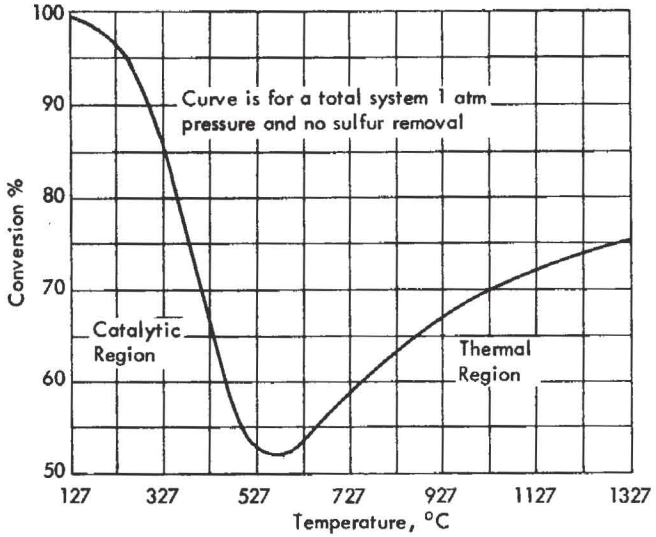


Fig. 4. Theoretical equilibrium conversion of hydrogen sulfide to vapor sulfide by selective oxidation with the stoichiometric air according to the over-all equation

$$2H_2S + O_2 \rightarrow 2H\ O + 2/nS_n$$

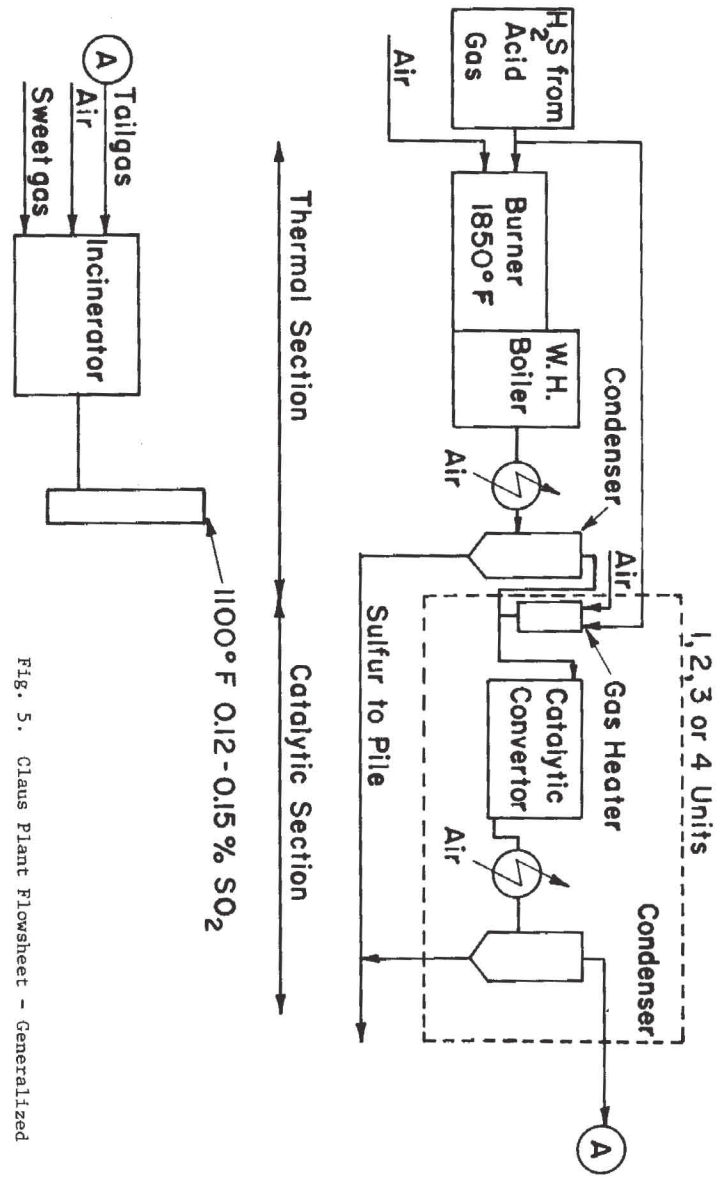


Fig. 5. Claus Plant Flowsheet - Generalized

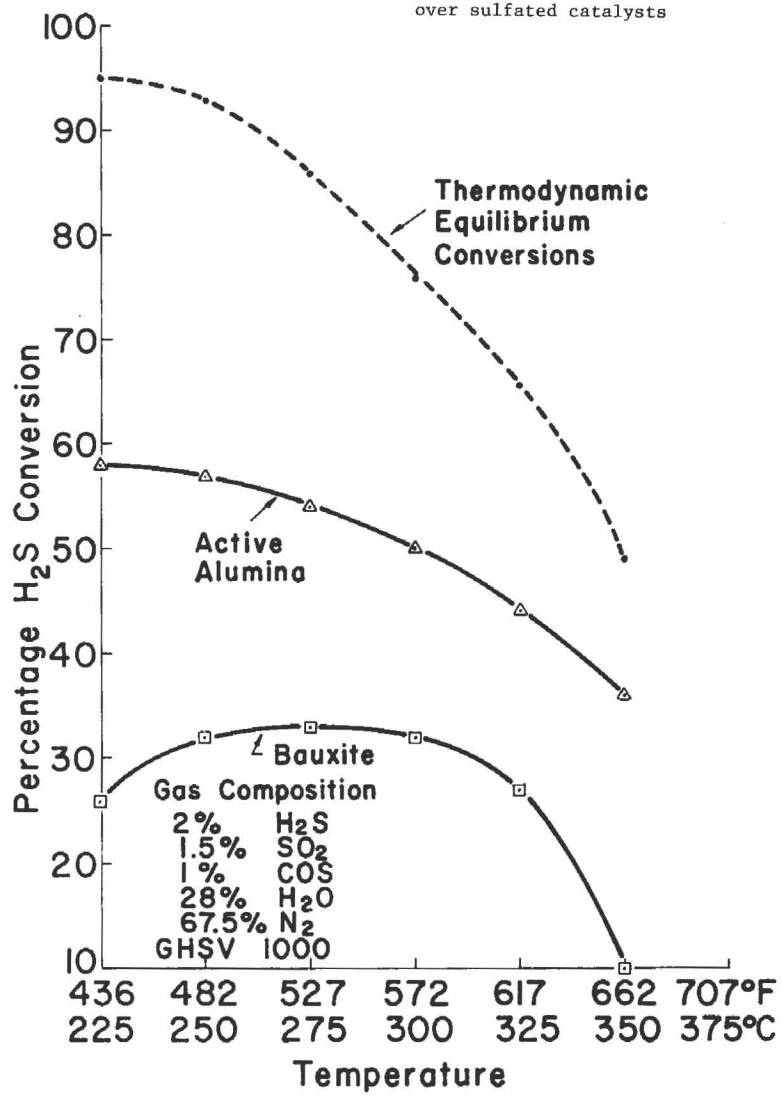


Fig. 7. Percentage $H_2S$ conversion over sulfated catalysts

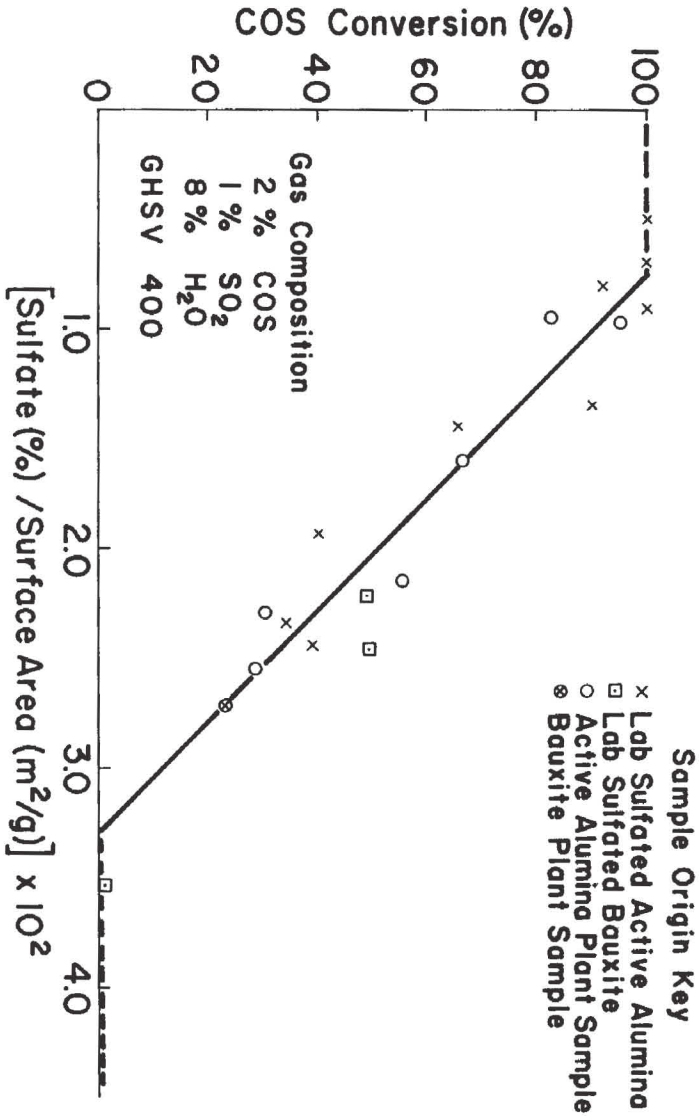


Fig. 6. COS conversion as a function of sulfate per unit surface area at 275°C

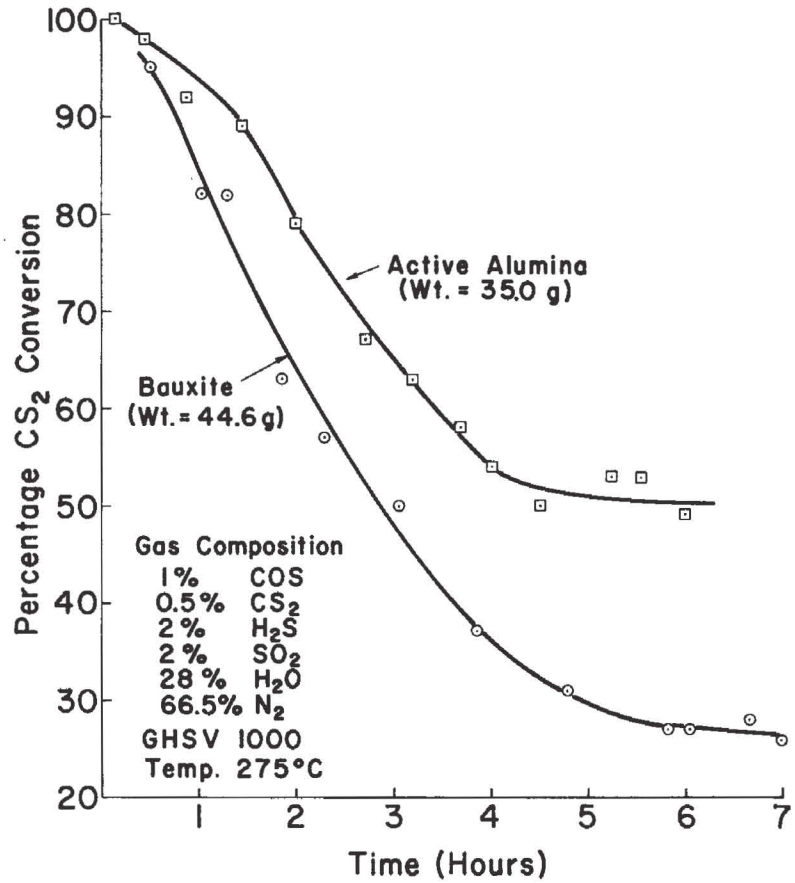


Fig. 8. Catalyst aging: $CS_2$ conversion with time over fresh catalyst

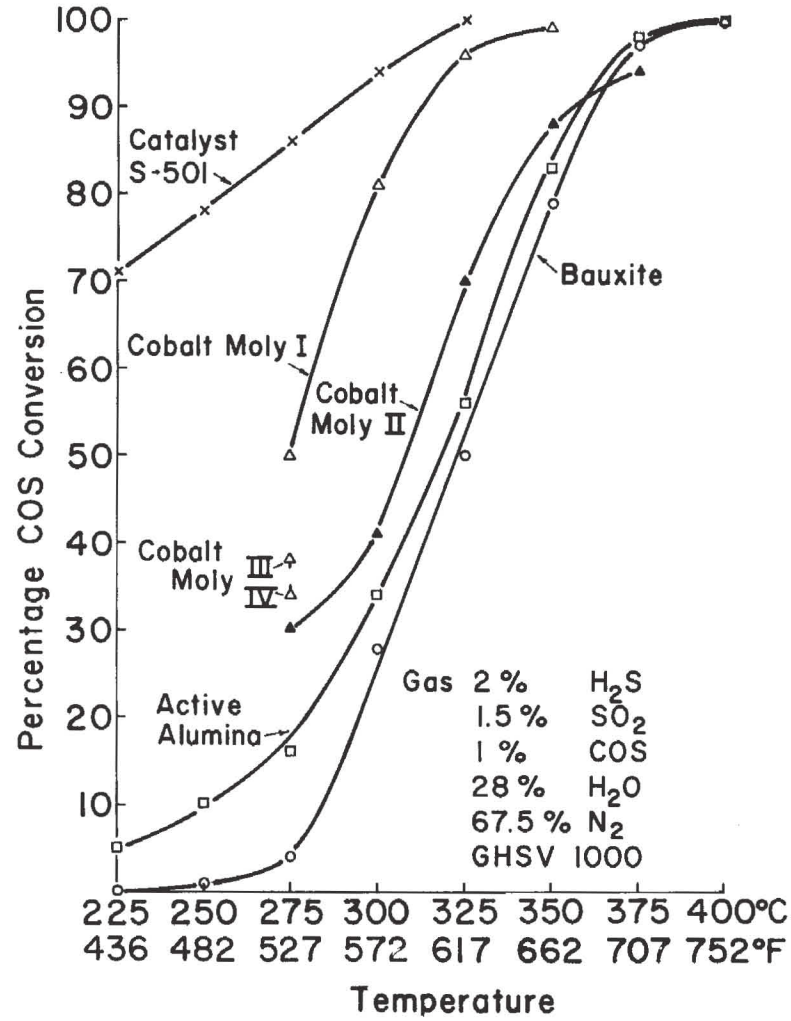


Fig. 9. COS conversion as affected by temperature for sulfated catalysts

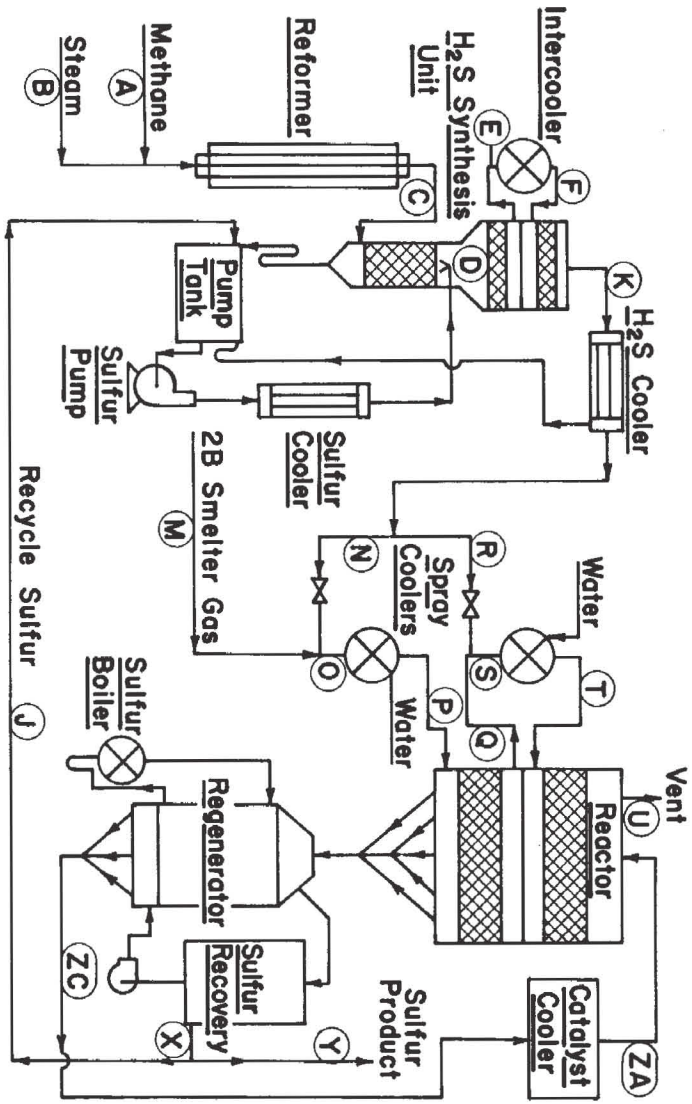


Fig. 10. $H_2S$ Reduction of $SO_2$ Low-Temperature Claus

APPENDIX A

PATENTS RELATING TO THE USE OF ALUMINAS IN SULFUR POLLUTION ABATEMENT

Patrick et al, U.S. 1,335,348 relates to a method and apparatus to remove small quantities of sulfur dioxide from air. For this purpose alumina gel and similar compounds can be used in an adsorption tower, provided that the adsorbent has sufficient pores to allow passage of the $SO_2$-contaminated gases through the absorbent. Recovery of the adsorbed $SO_2$ is accomplished by vacuum treating of the exhausted sorbent.

Hasche, U.S. 1,758,398. Sulfur dioxide is removed from off-gases by passing the contaminated gas through, for example, activated alumina at relatively low temperatures. After sorption of the sulfur dioxide, a steam treatment will remove the $SO_2$ from the exhausted sorbent.

Newsome et al, U.S. 2,378,155 uses a porous, hard, vitreous alumina for absorbing impurities or moisture from gases; indicates that iron, chromium or zirconium can be incorporated in alumina when the presence of such compounds are considered desirable.

Bienstock et al, U.S. 2,992,884 concerns the removal of sulfur oxide from gases by using an alkalized alumina absorbent. Alumina particles may be treated with solutions of sodium salts; for example, carbonates and nitrates which decompose at high temperatures to sodium oxide. Potassium salts may also be incorporated into the alumina.

Lewin, U.S. 3,115,387 prepares an alkalized alumina by the reaction of alumina with sodium carbonate.

Brandenburg et al, U.S. 3,227,659 relates to the preparation of an alumina composite consisting of a gamma or eta substrate coated with a film of sodium aluminate. This composite can further be treated with oxides of chromium, copper or zinc and then calcined to obtain a catalyst composition which promotes catalytic oxidation of combustible compounds in exhaust gases.

Wickert, U.S. 3,343,908 concerns a method of removing sulfur trioxide from combustion gases by contacting the contaminated gas with a mixture of a finely divided basic material such as magnesium oxide and a finely divided acidic oxide such as aluminum oxide.

Allegrini et al, U.S. 3,406,125 treats crushed bauxite ore with 3-10% of sodium hydroxide, followed by pelletizing of the mixture, with subsequent heating to temperatures up to about 800°F. According to this reference, the product, due to the bonding power of caustic, exhibits high hardness and good strength properties, allowing its use as a desulfurization catalyst.

Pijpers et al, U.S. 3,411,856 provides a method of removing sulfur dioxide from hot off-gases by contacting the gases with a compound consisting of an alumina substrate impregnated with a sodium compound. Indicates that the presence of iron compounds in the alumina substrate causes a beneficial effect as far as the adsorption of $SO_2$ is concerned.

Iron quantities between 0.2 and 10% of the alkali metal content of the alkali metal-alumina catalyst were found to provide very good acceptor qualities for the alumina composite.

Pijpers et al, U.S. 3,428,575 concerns the removal of $SO_2$ from hot gas mixtures by employing an alkalized alumina acceptor containing a small quantity of iron oxide. The presence of iron oxide as indicated by this reference improves the regeneration characteristics of the alpha alumina substrate.

Lowicki et al, U.S. 3,492,083 describes a process for the recovery of sulfur, sulfur-containing compounds, or mixtures thereof from industrial off-gases by contacting the gases with an absorbent comprising an aluminum oxide and an oxide or hydroxide of an alkaline or alkaline earth metal, or a mixture of any two or more such compounds. This reference indicates that the presence of iron and/or zinc will improve the efficiency of the absorbent for the removal of sulfur compounds from the off-gases.

Pilato et al, U.S. 3,501,264 relates to a glassy, alkalized alumina adsorbent having increased adsorption capacity for sulfur compounds. According to this reference, a basic alkali aluminum carbonate is prepared at first, which is then converted to an alumina alkalate by heating it at temperatures from 400 to 1400°F from one-half to four hours. This improved alkalized alumina provides adsorption capacities up to 24 grams $SO_2$ per 100 grams of sorbent.

Van Helden et al, U.S. 3,501,897 concerns a process for the removal of sulfur oxide from off-gases by contacting the sulfur compound containing off-gases with a sorbent which can be a gamma alumina impregnated with copper or silica.

Myers et al, U.S. 3,551,093 provides an improved alkalized alumina absorbent for removing sulfur oxides from flue gases. In accordance with the description of this reference, red mud is admixed with retorted oil shale and a small quantity of copper, cobalt and iron oxides, together with alumina hydrate, to provide a plastic mass. This plastic mass is dried at temperatures between 100-200°C and employed as an $SO_2$ sorbent. It is specifically stated in this reference that the presence of iron improves the sorption capacity of the alkalized alumina.

Emerson et al, U.S. 3,557,025, an alkalized alumina patent, describes an $SO_2$ sorbent prepared from selectively calcined alumina which has been modified with alkaline compounds.

REFERENCES


1. (a) D. J. Bienstock, J. H. Field and J. G. Myers, BuMines Report Invest. 7021 (July 1967).
   (b) D. Bienstock, J. H. Field, S. Katell and K. D. Plants, "Evaluation of Dry Processes for Removing Sulfur Dioxide from Power Plant Flue Gases", Journal of Air Pollution Control Association, Vol. 15, No. 10, 1965, pp. 459-464.

2. M. D. Schlesinger and E. G. Illig, "The Regeneration of Alkalized Alumina", Chemical Engineering Progress, Symposium Series No. 115, Vol. 67, 1971, pp. 46-51.

3. D. Bienstock and J. H. Field, U.S. Patent 2,992,884 (July 1961).

4. J. W. Town, P. E. Sanker and H. J. Kelly, "Alkalized Alumina Attritioning and $SO_2$ Sorption Rates", BuMines Report Invest. 7275 (July 1969);
   J. I. Paige, J. W. Town, J. H. Russell and H. J. Kelly, "Sorption of $SO_2$ and Regeneration of Alkalized Alumina in Fluidized Bed Reactors", BuMines Report Invest. 7414 (August 1970);
   J. H. Russell, J. I. Paige and D. L. Paulson, "Evaluation of Some Solid Oxides as Sorbents of Sulfur Dioxide", BuMines Report Invest. 7582 (1971).

5. J. E. Newell, "Making Sulfur from Flue Gases", Chemical Engineering Progress, Vol. 65, No. 8, 1969, pp. 62 et seq.

6. D. H. McCrea, A. J. Forney and J. G. Myers, "Recovery of Sulfur from Flue Gases Using a Copper Oxide Absorbent", Journal of Air Pollution Control Association, Vol. 20, No. 12, December 1970, pp. 819-24.

7. F. M. Dautzenberg, J. E. Nader, A. J. Van Ginnekan, "Shell's Flue Gas Desulfurization Process", Chemical Engineering Progress, Vol. 67, No. 8, 1971, pp. 86-91.

8. A. V. Slack, G. G. McGlannery and H. L. Falkenberry, "Economic Factors in Recovery of Sulfur Dioxide from Power Plant Stack Gas", Journal of Air Pollution Control Association, Vol. 21, No. 1, 1971, pp. 9-15.

9. J. B. Rosenbaum, D. R. George, L. Crocker, W. I. Nissen, S. L. May and H. R. Beard, "The Citrate Process for Removing $SO_2$ and Recovering Sulfur from Waste Gases", presented at AIME Environmental Water Quality Conference, Washington, D. C., June 7-9, 1971.

10. L. E. Gressingh, A. F. Graete, F. E. Miller and H. Barker, "Applicability of Aqueous Solutions to the Removal of $SO_2$ from Flue Gases", PB-196,780, Final Report under Contract PH 86-68-77 NAPCA.

11. M. P. Appleby, "The Recovery of Sulfur from Smelter Gases", Journal of the Society of Chem. Ind., Vol. 56, 1937, pp. 139T-46T.

12. T. Nakamura, A. Matsu and M. Matsu, U.S. Patent 3,497,459 (1970); Y. Aiba and T. Furumori, U.S. Patent 3,544,476 (1970) assigned to Taki Fertilizer Manufacturing Co., Ltd., Kakagawa, Japan.

13. G. N. Brown, S. L. Torrence, A. J. Repik, J. L. Stryker and F. J. Ball, "$SO_2$ Recovery via Activated Carbon", Chemical Engineering Progress, Vol. 68, No. 8, 1972, pp. 55-56.

14. W. R. Horlacher, R. E. Barnard, R. K. Teague and P. L. Hayden, "Four $SO_2$ Removal Systems", Chemical Engineering Progress, Vol. 68, No. 8, pp. 43-50.

15. Charles L. Thomas, "Catalytic Processes and Proven Catalysts", Academic Press, New York, 1970, pp. 240-253.

16. L. A. Haas, T. H. McCormick and S. E. Khalafalla, "Removing Sulfur Dioxide by Carbon Monoxide Reduction", BuMines Report of Investigation 7483 (1971).

17. K. T. Semrau, "Control of Sulfur Oxide Emissions from Primary Copper, Lead, and Zinc Smelters--A Critical Review", Journal of Air Pollution Control Assoc., Vol. 21, No. 4, 1971, pp. 185-194.

18. R. Lepsoe, "Chemistry of Sulfur Dioxide Reduction Kinetics", Ind. Engineering Chemistry, Vol. 32, No. 7, 1940, pp. 910 et seq.

19. E. P. Fleming and T. C. Fitt, "High Purity Sulfur from Smelter Gases", Ind. Engr. Chem., Vol. 42, No. 11, 1950, pp. 2249 et seq.

20. J. R. West and E. H. Conroy, "Process of Reducing $SO_2$ to Elemental Sulfur", U.S. Patent 3,199,955 (August 10, 1965).

21. Anon., "New Facility Will Produce Iron-Nickel Pellets and Elemental Sulfur", Eng. Mining Journal, Vol. 169, No. 3, 1968, p. 168.

22. M. J. Pearson, "Catalysts for Claus Process", presented at meeting of Canadian Natural Gas Producers Association, Calgary, Alberta, Canada, November 24, 1972. To be published in CNGPA Journal.

23. A. W. Yodis, "Sulfur from Smelter Gas by Reduction of Sulfur Dioxide", preprint presented at Division of Fertilizer & Soil Chemistry, 158th National Meeting of American Chemical Society.

24. V. B. Sefton and H. J. Hopton, "Removal of Sulfur Dioxide from Waste Gases", Canadian Patent 838,599 (1971).